ALLEGION™

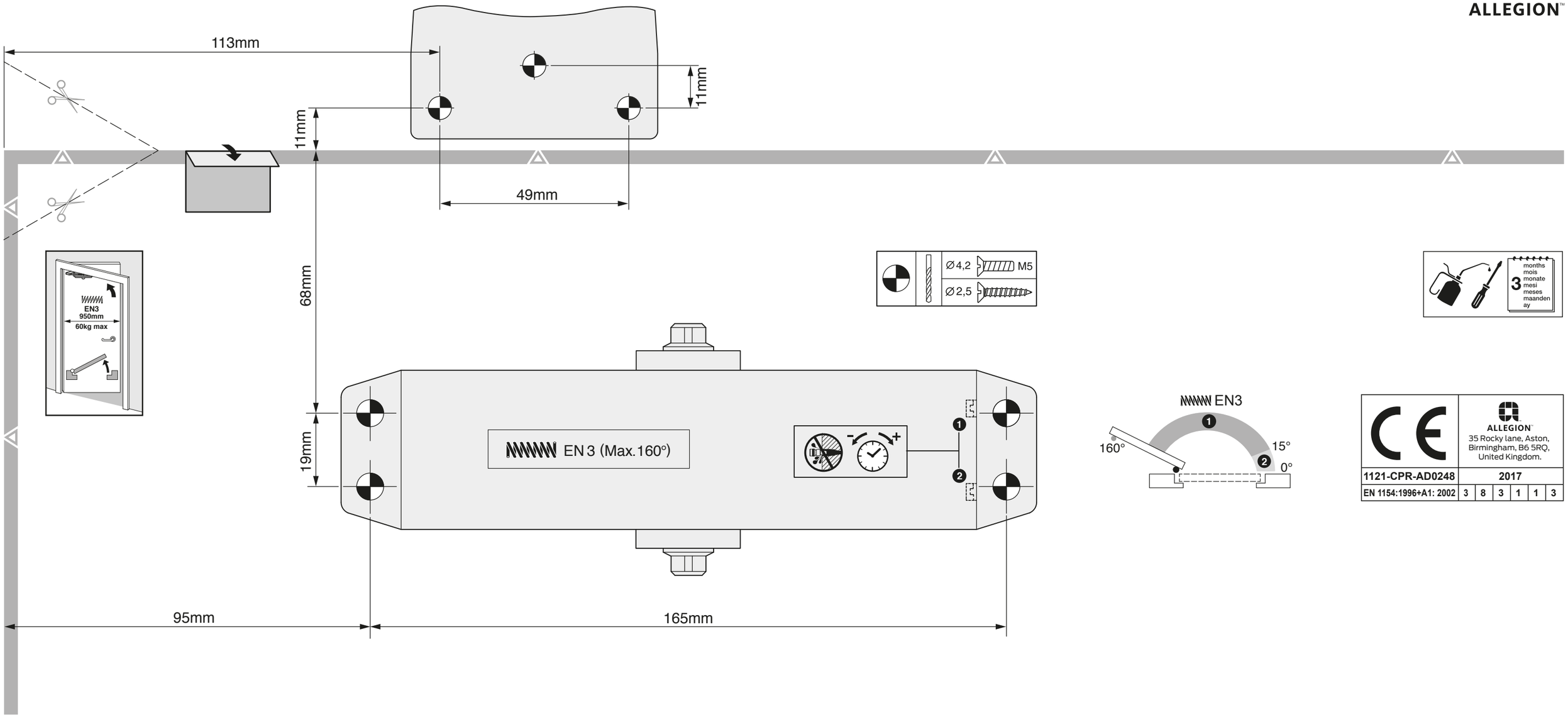

CE	ALLEGION™ 35 Rocky lane, Aston, Birmingham, B6 5RQ, United Kingdom.
1121-CPR-AD0248	2017
EN 1154:1996+A1: 2002	3 8 3 1 1 3

CE certifire CF 390

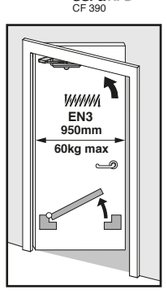

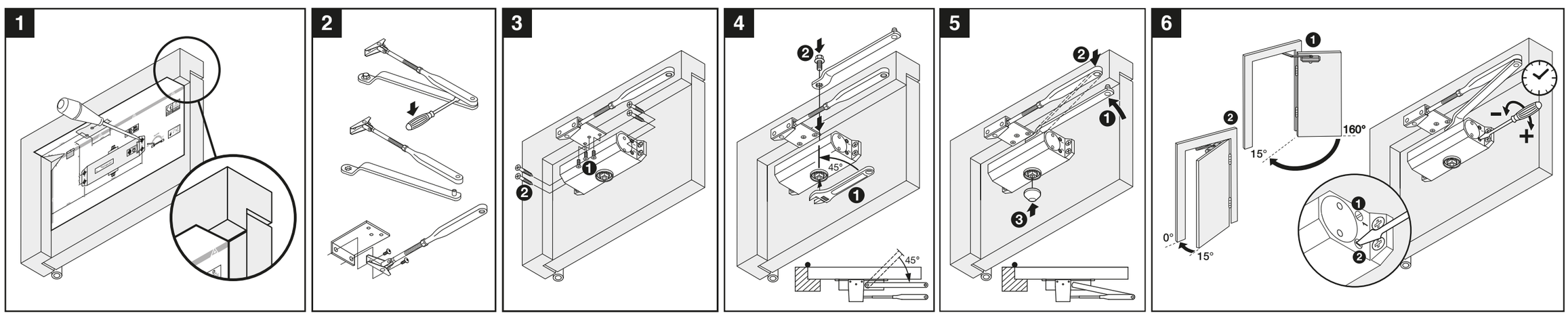

AL-0000419975

ALLEGION™

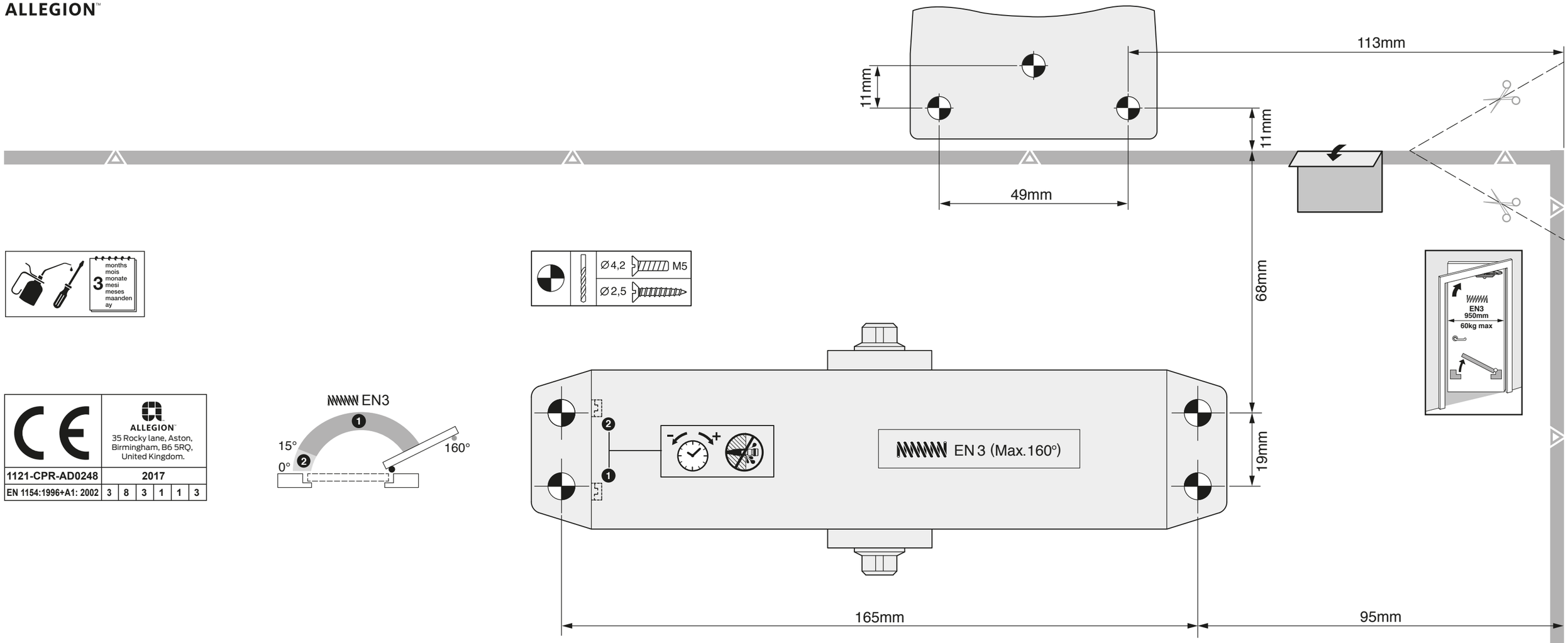

CE	ALLEGION™ 35 Rocky lane, Aston, Birmingham, B6 5RQ, United Kingdom.					
1121-CPR-AD0248	2017					
EN 1154:1996+A1: 2002	3	8	3	1	1	3

CE certifire CF 390

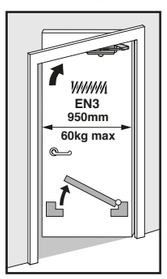

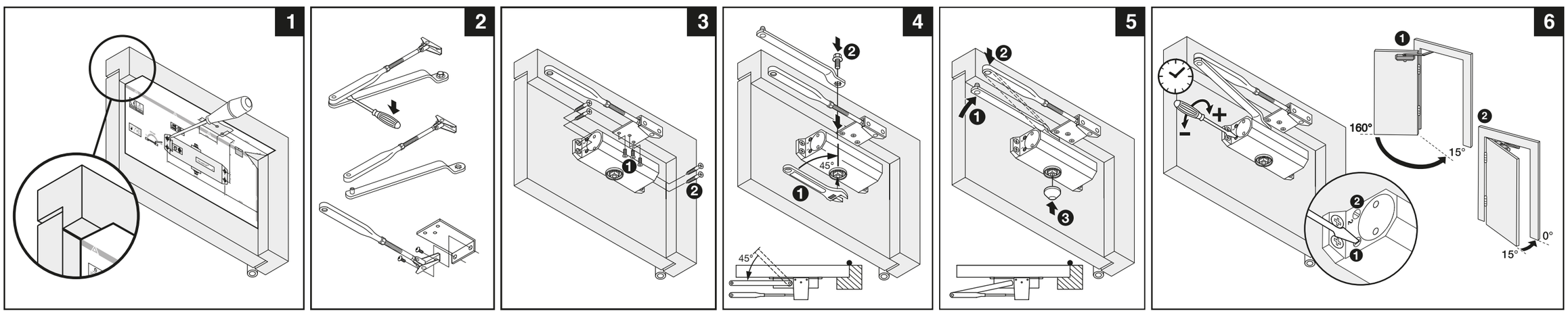

AL-0000419975